ALT.		
B	412877	A

WINDING RTD'S

1. THERE ARE QTY-12 RESISTANCE TYPE TEMPERATURE DETECTORS (RTD) INSTALLED IN THE STATOR WINDING, 4 PER PHASE. REFER TO NAMEPLATE ATTACHED TO THE MOTOR ADJACENT TO ACCESSORY OUTLET BOX FOR RATING OF THE RTD'S.

2. DETECTORS ARE INSTALLED IN PHASES AS SHOWN.

PHASE	A	B	C
RTD NO.	1, 11, 4, 44	2, 22, 5, 55	3, 33, 6, 66

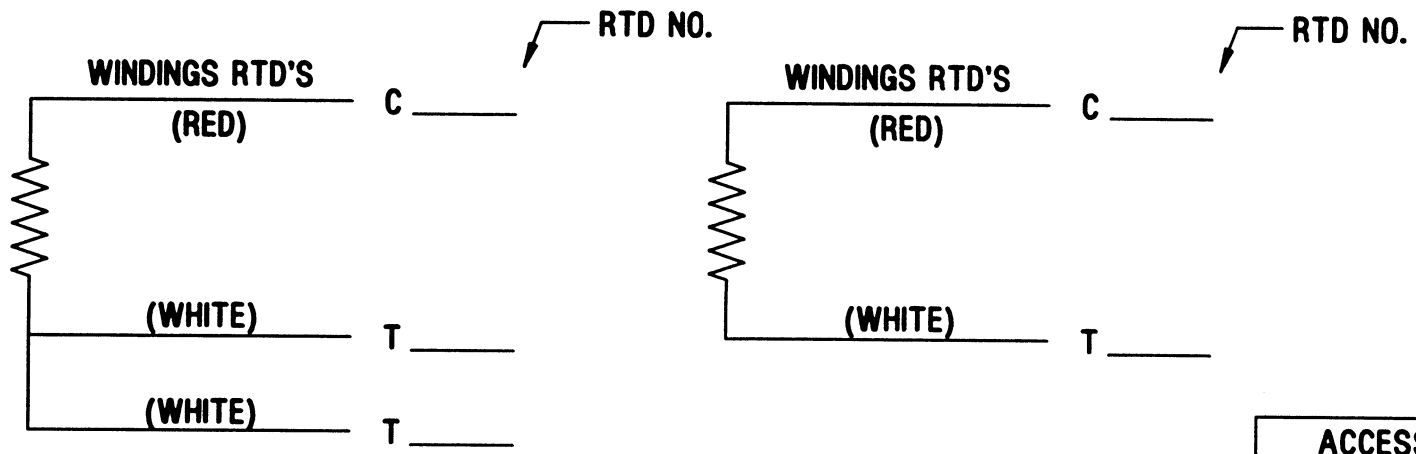

ACCESSORY LISTING
QTY-6 3 LEAD RTD'S QTY-6 2 LEAD RTD'S

ALT LET	CHANGE NOTICE NO.	DESCRIPTION OF CHANGE
-	MOD	20-NOV-97
B	MOD	7-JUN-00 DELETED SP HTRS

U.S. ELECTRICAL MOTORS
DIVISION OF EMERSON ELECTRIC CO.
ST. LOUIS, MISSOURI

TITLE: CUSTOMER CONNECTION DIAGRAM

SCALE	NONE	UNITS	IN	DRWN 20-NOV-97, TLP	PART#	---	FRAME	---
MATERIAL	---			RVSD 7-JUN-00, RWK	CSTG#	---	TYPE	---
				APPD 7-JUN-00, REP				

SHEET 1 OF 1 PREFIX CDG

ALT. B 412877 A