Specifications and Ordering Information

200150 Accelerometer

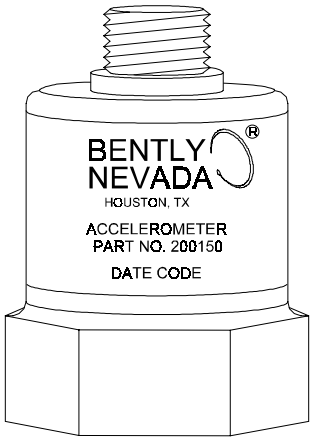

Description

The 200150 Accelerometer is a general-purpose, case-mounted seismic transducer designed specifically for use with Bently Nevada 1900/25 and 1900/27 monitors, and the Trendmaster® 2000 Acceleration-to-Velocity Transducer Interface Modules (both TIM and flexiTIM™ versions).

The 200150 is a piezoelectric-based transducer molded into a thermoplastic case. This design provides an extremely rugged and moisture-resistant transducer, well-suited for harsh industrial environments. The transducer's top-mounted, four-pin, screw-type connector allows for easy installation and removal of the transducer signal cable. A female 3/8-24 UNF threaded insert, on the bottom of the transducer, accommodates numerous mounting options.

Note: The 200150 is intended to replace both the 89129 and 190520 accelerometers. Using the adapter hardware detailed in this document, the 200150 accelerometer can be used with existing 1900 monitors or TIMs that currently use the 89129 or 190520 accelerometers. However, the physical packaging and mounting methods differ between the 200150 and these other accelerometers, and must be considered before assuming the 200150 can be used in all applications previously addressed by the 89129 or 190520.

⚠ **Caution**

If housing measurements are being made for overall protection of the machine, thought should be given to the usefulness of the measurement for each application. Most common machine malfunctions (imbalance, misalignment, etc.) originate at the rotor and cause an increase (or at least a change) in rotor vibration. In order for any housing measurement alone to be effective for overall machine protection, a significant amount of rotor vibration must be faithfully transmitted to the bearing housing or machine casing, or more specifically, to the mounting location of the transducer.

In addition, care should be exercised in the physical installation of the transducer. Improper installation can result in a decrease of the transducer amplitude and frequency response, and/or the generation of signals which do not represent actual machine vibration.

Upon request, Bently Nevada can provide engineering services to determine the appropriateness of housing measurements for the machine in question and/or to provide installation assistance.

Specifications

Parameters are specified at +25° C (+77° F) unless otherwise indicated.

200150 Accelerometer

Electrical

Sensitivity:	10.2 mV/m/s^2 (100 mV/g) ±12% at 80 Hz
Frequency Response:	10 to 1000 Hz ± 10%; referenced to 80 Hz
Acceleration Range:	245 m/s^2 (25 g) peak
Amplitude Linearity:	2% from 9.8 m/s^2 to 98 m/s^2 (1 g to 10 g) peak
Transverse Sensitivity:	Less than 5% of Sensitivity at 80 Hz
Mounted resonant frequency:	Greater than 5000 Hz
Polarity:	Motion directed from the mounting stud toward the top connector will result in a positive output signal.
Broadband Noise Floor:	Less than 0.147 m/s^2 (0.015 g) rms.
Pin to Case Isolation:	600 V rms

Environmental Limits

Operating and Storage Temperature:	-40°C to +85°C (-40°F to +185°F).
Relative Humidity:	100% relative, condensing, nonsubmerged.
Shock Survivability:	Less than 5 % change in sensitivity due to a three-foot drop to a vinyl covered floor.

Mechanical

Mounting Torque:	2.8 N•m (25 in-lb)
Weight:	71 g (2.5 oz)
Installed Height: (200150 with cable attached)	114.3 mm (4.5 in)
Mounting Stud Material:	All studs are made of 300 series stainless steel.

200151 and 200152 Cables

Physical

Construction:	Four conductors (22 AWG) with foil shield and drain wire (100% coverage), yellow PVC outer jacket. Powder-coated aluminum coupling nuts.
Minimum Bend Radius:	25.4 mm (1 in)

Environmental Limits

Operating Temperature:	-20°C to +100°C (-4°F to +212°F) **Note:** These cables may be used at lower temperatures if the cable is not allowed to move or flex. Flexing these cables at temperatures below -20°C will damage them.
Seal:	Connectors provide an IP67 seal to transducer and flexiTIM. Connectors are molded to cable.

142485-01 Housing Cable Adapter

Physical

Mounting:	Mounts in a housing with wall thickness from 0.8 mm to 7 mm (0.03 to 0.275 in), using a 17mm or 11/16 hole.

Environmental Limits

Operating and Storage Temperature:	-40°C to +100°C (-40°F to +212°F).
Sealing:	Seals against hose-directed water (1-in nozzle, held 10 feet away, with 65 gal/min flow rate)

141887 Conduit Cable Adapter

Physical

Mounting:	Mounts to 1-in conduit bodies with 8-32 threaded mounting holes, space from 4.8 to 4.875 inches apart (nominal center-to-center dimension).

Environmental Limits

Operating and Storage Temperature:	-40°C to +100°C (-40°F to +212°F)
Sealing:	Seals against hose-directed water (1-in nozzle, held 10 feet away, with 65 gal/min flow rate)

Ordering Information

200150 Accelerometer

200150-A XX
Option Description

A: Mounting Studs **0 0** No Stud

Adhesive Studs are sold in kits containing four studs with frames to hold the studs to the substrate while the adhesive cures. Also in the kit is a packet of acrylic adhesive and materials to mix its two components. A scouring pad and alcohol wipe are provided for preparing the mounting surface.
Option Description

A: Adhesive Studs **0 1** 3/8-24 (P/N **04284020**)

Hex Plate Stud
The plates are 6.35 mm (0.25 in) thick.
The available sizes are listed in the following table:

A:	Thread size	Stud Length	Hex size	Part number
0 2	3/8-24 to 3/8-24 UNF	6.0 mm (0.235 in)	1 3/8-in	**107756-01**
0 3	3/8-24 to 1/2-20 UNF	12.1 mm (0.475 in)	1 3/8-in	**107755-01**
0 4	3/8-24 to 1/4-NPT	16.5 mm (0.650 in)	1 3/8-in	**107754-01**
0 5	3/8-24 to 1/4-28 UNF	8.3 mm (0.325 in)	1 3/8-in	**128038-01**
1 8	3/8-24 to M8x1	8.3 mm (0.325 in)	1 3/8-in	**125094-01**

Hex Studs
The available sizes are listed in the following table:

A:	Thread size	Stud Length	Hex size	Part number
0 6	3/8-24 to 1/4-NPT	18.2 mm (0.715 in)	3/4-in	**131563-01**
0 7	3/8-24 to 3/8-NPT	18.4 mm (0.725 in)	3/4-in	**131563-02**
0 8	3/8-24 to 1/2-NPT	23.0 mm (0.905 in)	1-in	**131563-03**
0 9	3/8-24 to 3/4-NPT	23.2 mm (0.915 in)	1 1/4-in	**131563-04**
1 0	3/8-24 to 1-NPT	28.1 mm (1.105 in)	1 3/8-in	**131563-05**
1 1	3/8-24 to 1 1/4-NPT	28.8 mm (1.135 in)	1 3/4-in	**131563-06**
1 2	3/8 in 24 to 1/4-20 UNC	11.6 mm (0.457 in)	3/4-in	**131562-01**
1 3	3/8 in to 5/16-18 UNC	13.0 mm (0.512 in)	3/4-in	**131562-02**
1 4	3/8-24 to 3/8-24 UNF	6.1 mm (0.24 in)	3/4-in	**131562-03**
1 5	3/8 in to 3/8-16 UNC	13.7 mm (0.54 in)	3/4-in	**131562-04**
1 6	3/8-24 to 1/2-13 UNC	16.8 mm (0.66 in)	3/4-in	**131562-05**

flexiTIM Cable

200151 - AXX
This cable is used to connect the 200150 to the 200100 Acceleration-to-Velocity flexiTIM™.

A:	Length
0 5	0.5 ±0.04 metre (1.64 ±0.13 feet)
1 0	1.0 ±0.08 metre (3.28 ±0.25 feet)
1 5	1.5 ±0.11 metre (4.92 ±0.36 feet)
2 0	2.0 ±0.15 metre (6.56 ±0.5 feet)
4 0	4.0 ±0.15 metre (13.12 ±0.5 feet)
6 0	6.0 ±0.15 metre (19.69 ±0.5 feet)

TIM and 1900 Monitor Cable

200152 - AXX
This cable is used to connect the 200150 to 1900/25 and 1900/27 monitors, or to 89130-01 and 89546-01 acceleration-to-velocity TIMs. When this cable is used to connect the 200150 to the TIMs noted above, a special insulation displacement connector (IDC) p/n 00500785 must be used in place of the IDC connector that comes with the TIM, in order to provide an adequate connection to the 200152 cable.

A:	Length
0 4	4.0 ±0.15 metre (13.1 ±0.5 feet)
1 5	15.0 ±0.15 metre (49.2 ±0.5 feet)
2 5	25.0 ±0.15 metre (82.0 ±0.5 feet)

Note: Special cable lengths are available as modifications. Consult the factory.

flexiTIM Housing Cable Adapter

142485-01
This adapter is used when connecting a 200150 accelerometer to an existing 89130-01 or 89546-01 TIM, or 1900 monitor when the TIMs or monitors are located in a housing, and conduit is not used to protect the transducer cable (see Figures 6 and 7).

flexiTIM Conduit Cable Adapter

141887-AXX
This adapter is used when connecting a 200150 accelerometer to an existing 89130-01 or 89546-01 TIM, or 1900 monitor when the TIMs or monitors are located in a housing, and conduit is used to protect the transducer cable (see Figures 8 and 9).

Option Descriptions

A: Connector Style
0 1 single connector
0 0 dual connector

Dimensional Drawings

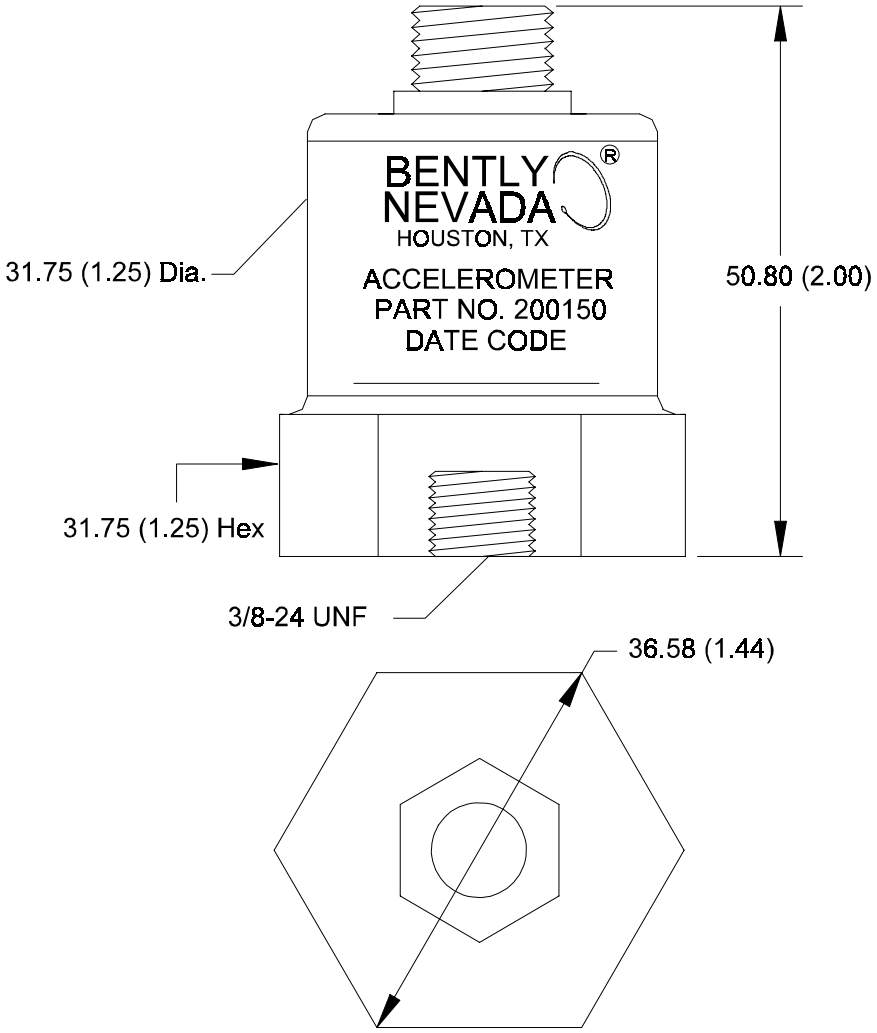

Figure 1: 200150 Accelerometer Dimensions
All dimensions are in millimetres (inches)

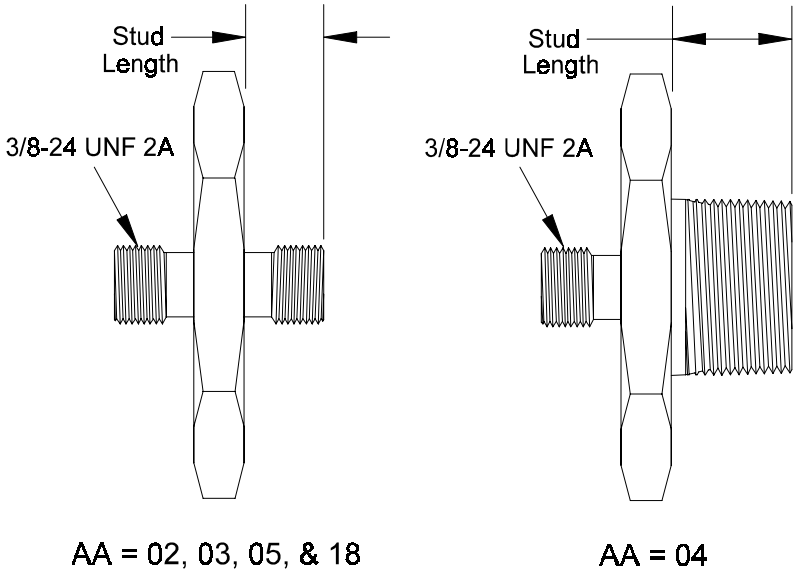

Figure 2: Hex Plate Stud Dimensions

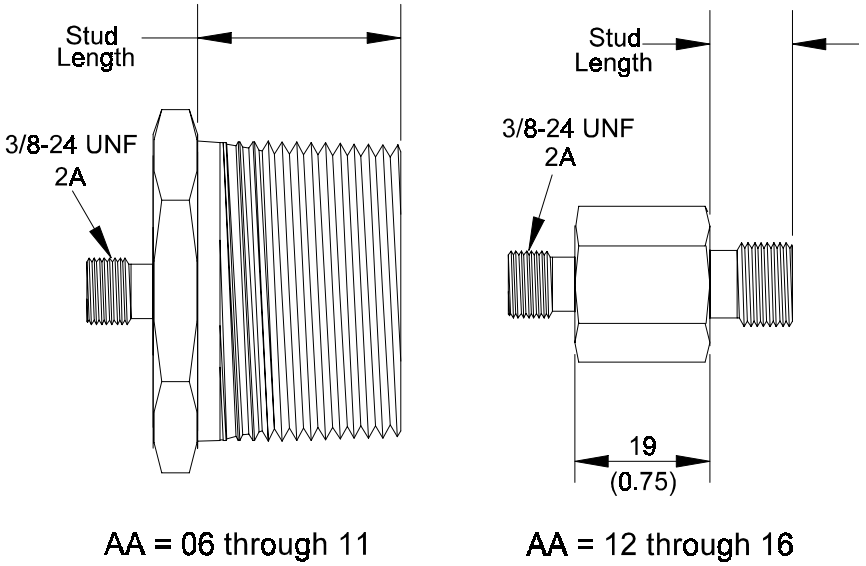

Figure 3: Hex Studs Dimensions

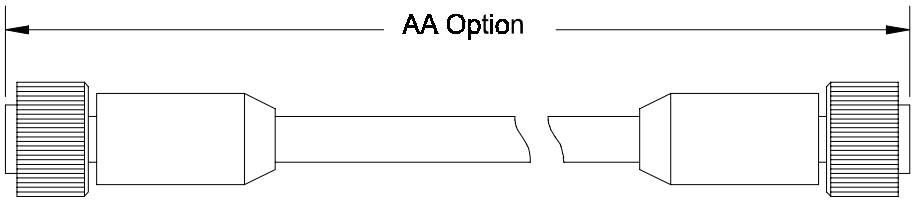

Figure 4: 200151 Cable

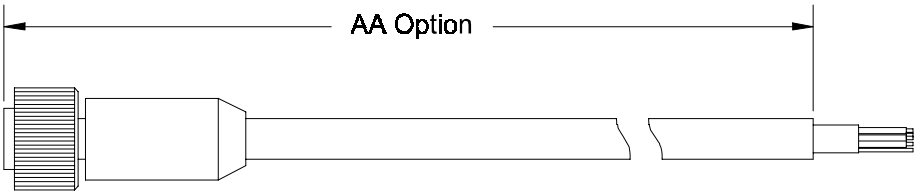

Figure 5: 200152 Cable

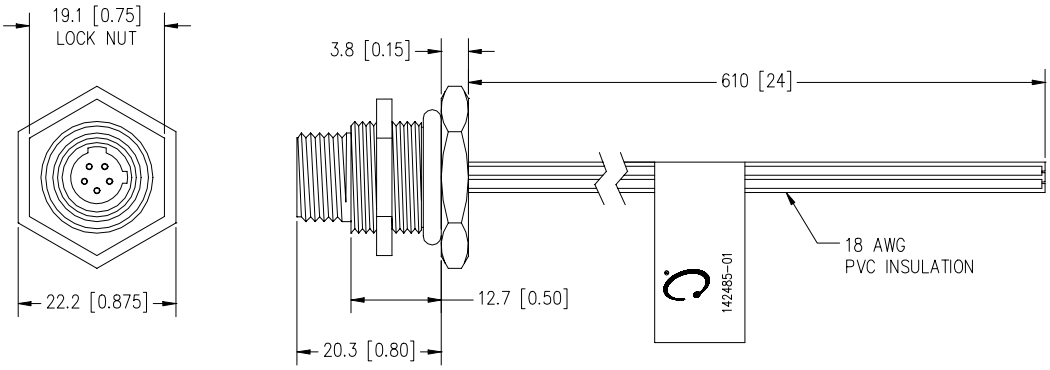

Figure 6: 142485-01 Housing Cable Adapter

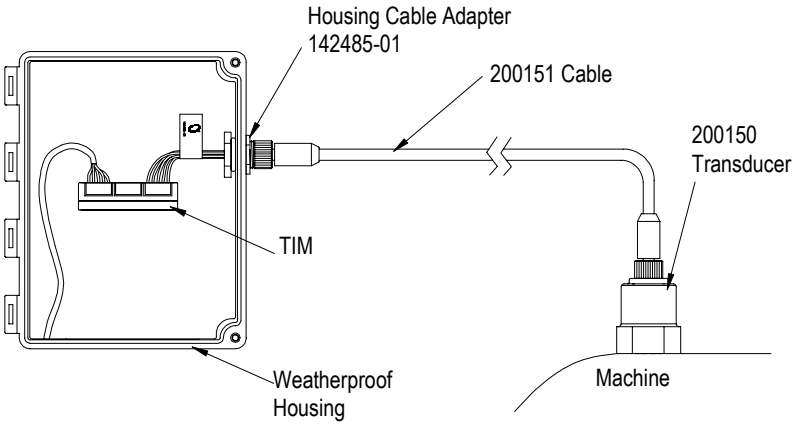

Figure 7: Typical Installation Using 142485-01 Housing Cable Adapter

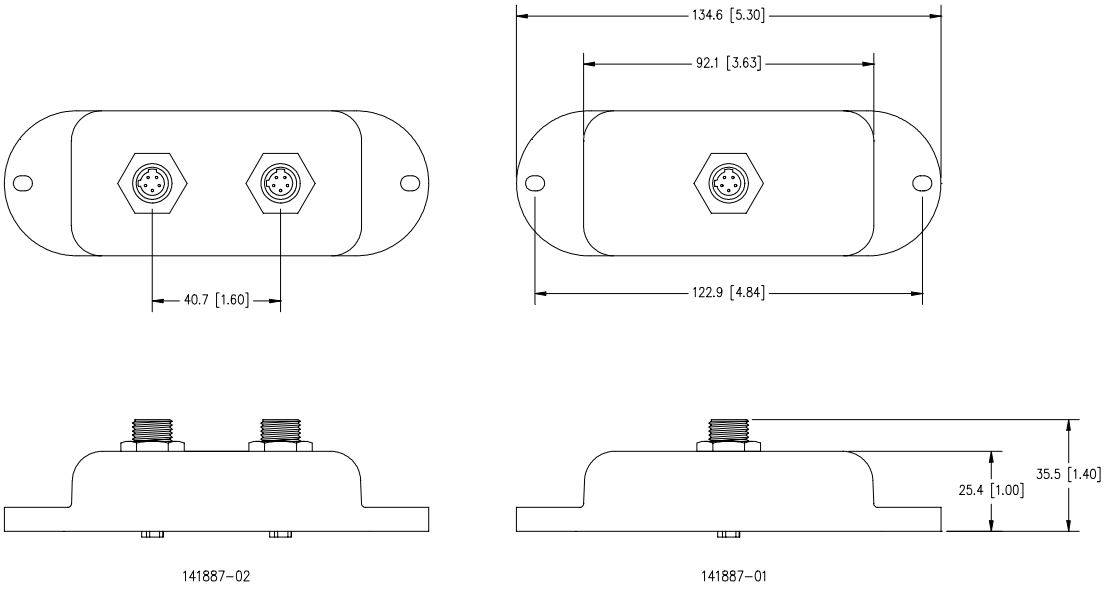

Figure 8: 141887 Conduit Cable Adapters

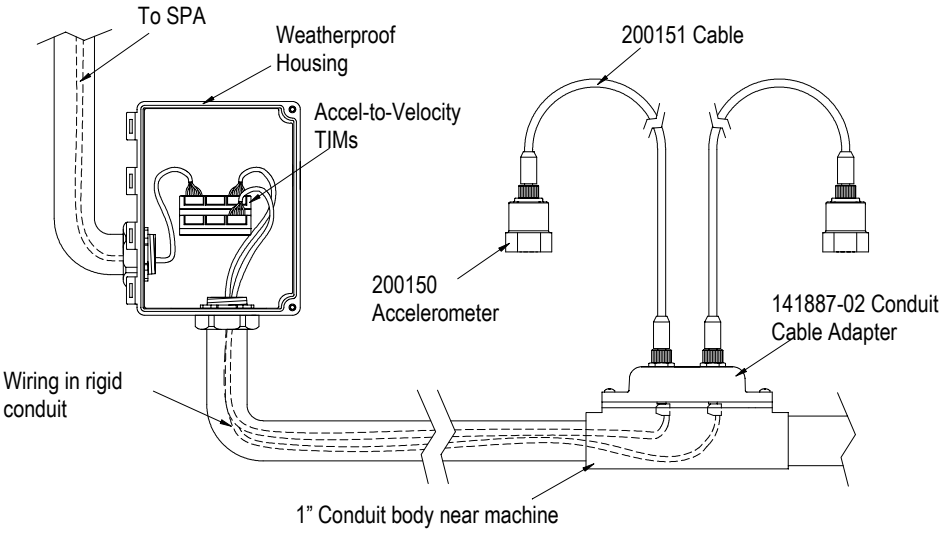

Figure 9: Typical Installation Using 141887-02 Dual Conduit Cable Adapter

Graphs

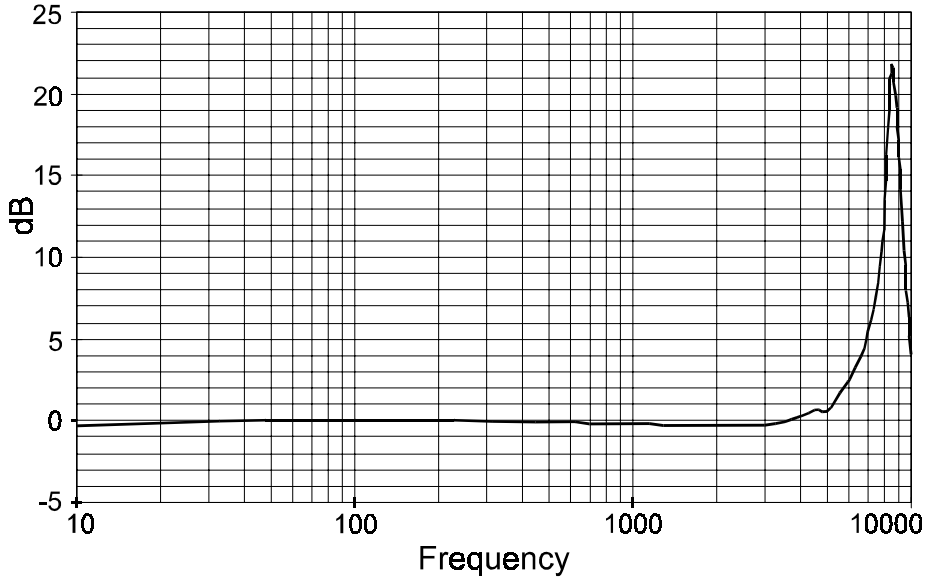

Graph 1: Typical Frequency Response Graph

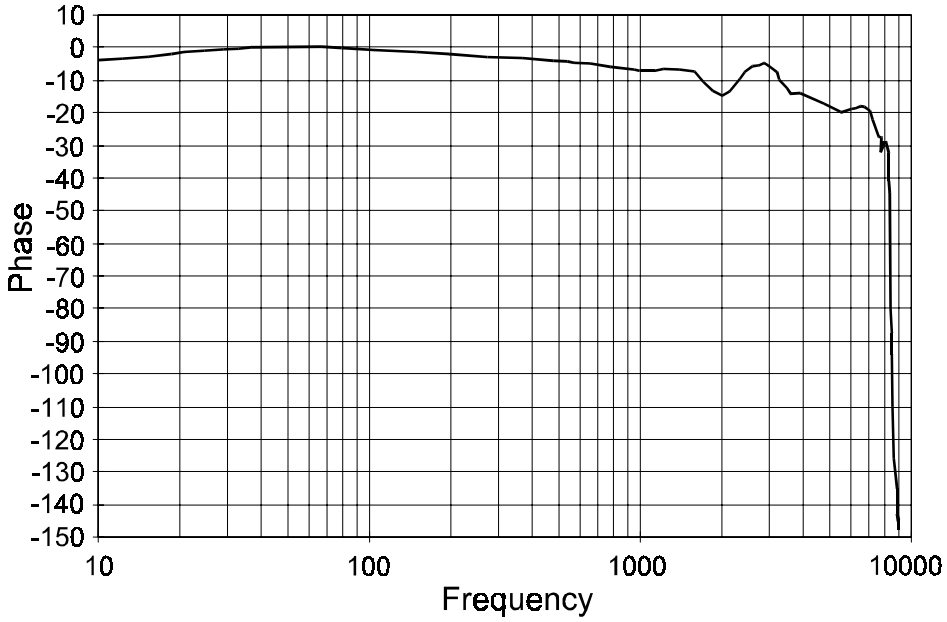

Graph 2: Typical Phase Response Graph

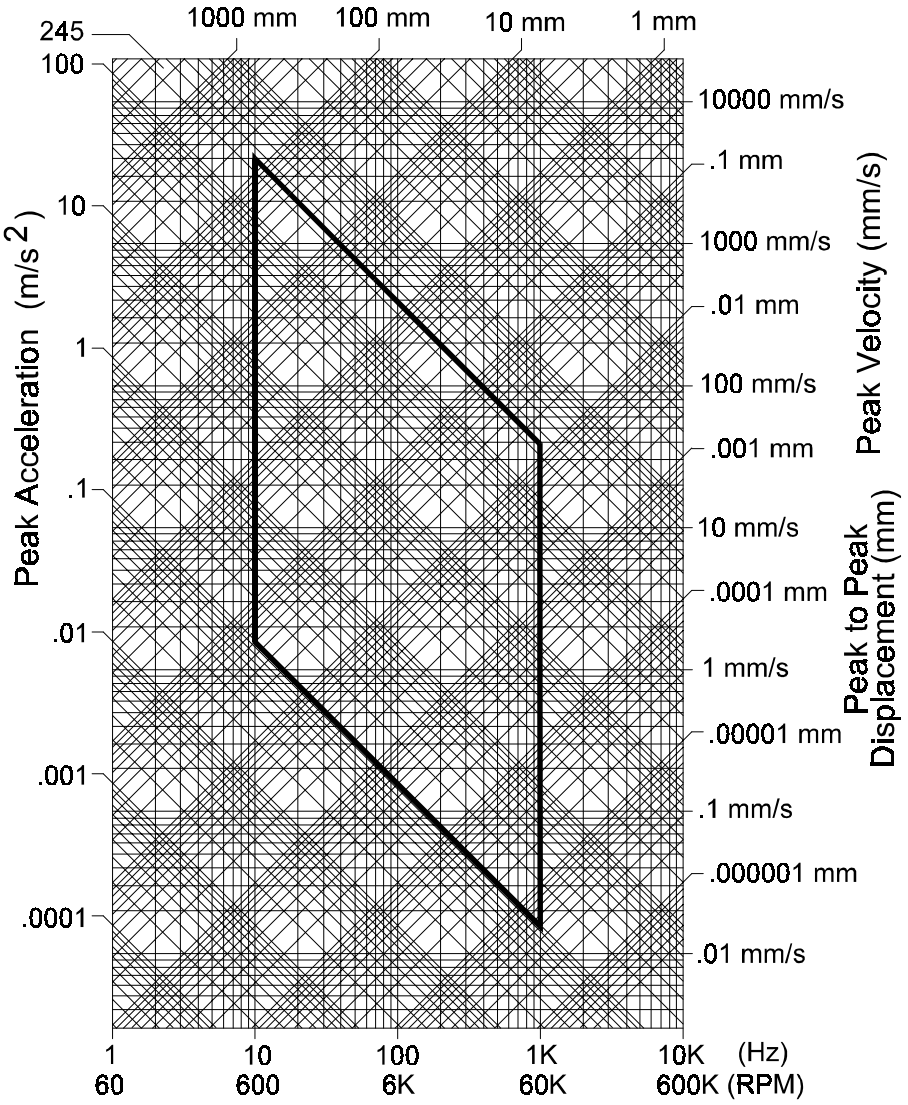

Graph 3: 200150 Operating Range (Metric)

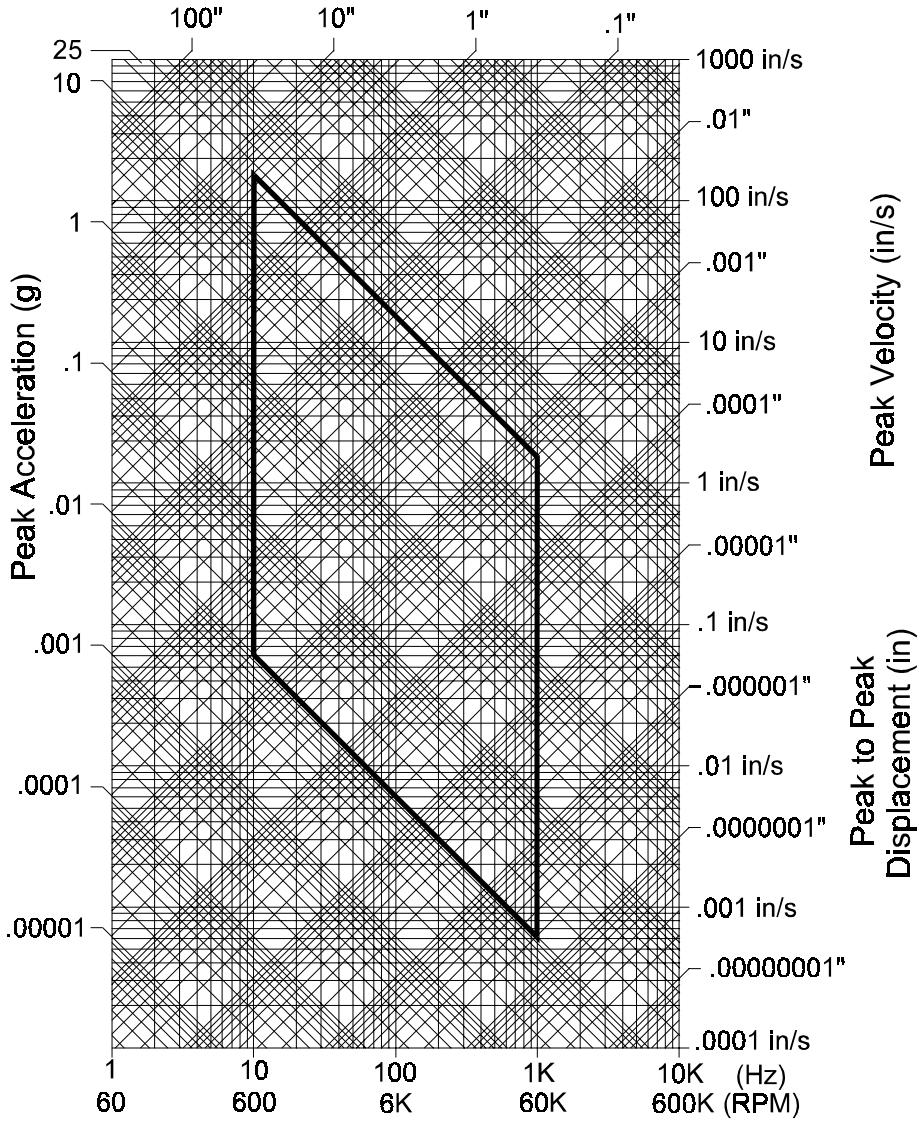

Graph 4: 200150 Operating Range (English)