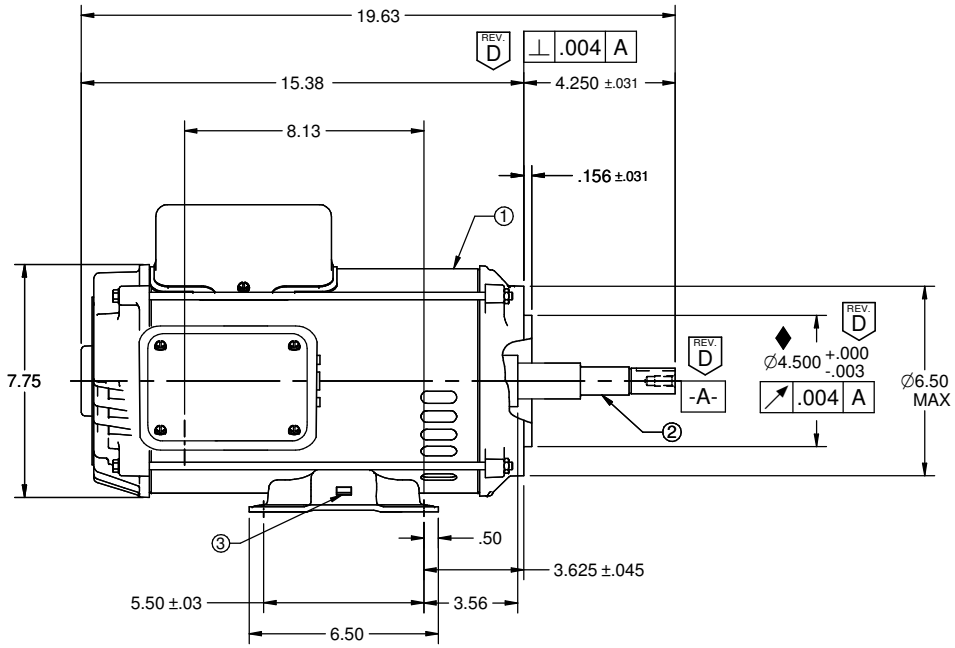

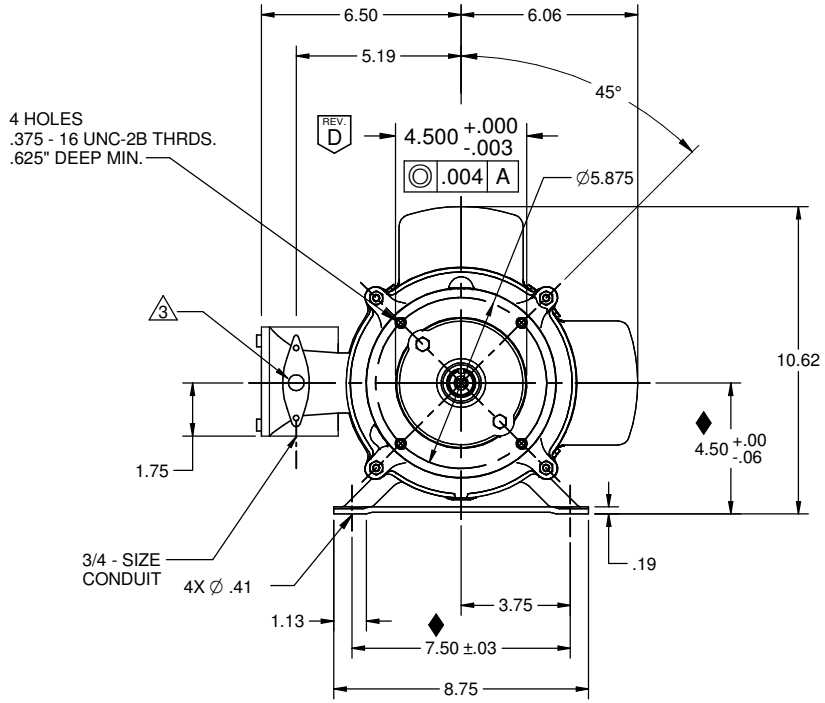

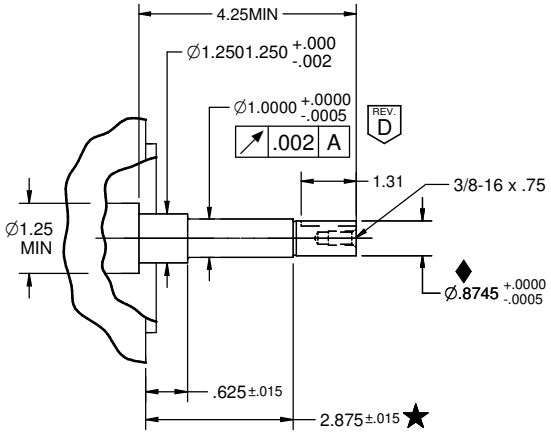

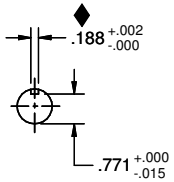

USEM M/N	CATALOG	HP	PHASE	FREQ	VOLTS	SPEED	FRAME	TYPE	INSUL. CLASS
DB02	EEQ500	5	1	60	230	3550	184JMZ	DM-4	F

CODE	TYP. FL EFF.	FLA	SF	SF AMPS
G	88.1	20.0	1.15	23.0

REV. D

NOTES	
①	MOTOR PAINTED WITH BLACK-SEMI GLOSS-43-2747
②	303 STAINLESS STEEL SHAFT EXTENSION
③	BURNDY GKA4C GROUNDING LUG OR EQUIVALENT WITH LOCKWASHER BETWEEN LUG AND FOOT
④	GASKET BETWEEN FRAME AND OUTLET BOX BASE
⑤	GASKET BETWEEN OUTLET BOX COVER AND OUTLET BOX BASE
⑥	N/P BLANKLINE TO HAVE NOTE - "SUITABLE FOR FIELD WIRING/USE COPPER CONDUCTORS ONLY"

REV. D

NOTES (UNLESS OTHERWISE SPECIFIED):

1. MOTORS MUST BE CONNECTED SUCH THAT ROTATION IS CW FROM FODE.
2. ★ - CUSTOMER CRITICAL DIMENSION.
3. ♦ - MAJOR DIMENSION.

3 RESET BUTTON, THERMAL PROTECTOR.

ITEMS AND MATERIALS SPECIFIED HEREIN MUST COMPLY WITH THE EUROPEAN REDUCTION OF HAZARDOUS SUBSTANCES (RoHS 2) DIRECTIVE 2011/65/EU, REGULATIONS (EC) NO. 1907/2006 ("REACH") AS OF 1 JUNE 2007 AND ALL SUBSEQUENT UPDATES. PLEASE REFER TO THE OFFICIAL EU DOCUMENTS FOR COMPLETE DEFINITION, RESTRICTIONS, AND LIMITS FOR EACH SUBSTANCE.

NIDEC CONFIDENTIAL
NIDEC MOTOR CORPORATION 23-MAY-17

REVISION DESCRIPTION FOR: D3420-00
ADDED NOTE 6, GTOL, DATUM -A-, DIM 4.500
AND "TYP. FL EFF." COLUMN.

MATERIAL:
- - - -

SCALE: NONE
UNITS: INCHES
TOLERANCES ON DIMENSIONS (UNLESS OTHERWISE SPECIFIED)
INCHES | mm
ANGLES X°= ±1°

TITLE: DRAWING, DIMENSION

NIDEC MOTOR CORPORATION

ISSUED BY: F. RAMIREZ
APPROVED BY: P.ORTEGA
REVISION DATE: 22-JUN-18
CODE
DWG NO. 0645556
REV D
SHEET NUMBER 1 OF 1
DWG SIZE B

NMCB (OCT-2013)
SOLIDEDGE