EFFECTIVE: 15-MAY-13	DIMENSION PRINT TITAN II - WEATHER PROTECTED TYPE II FRAME: 5000S, MS, SS BASIC TYPE: RS	PRINT: 07-1903
SUPERSEDES: 08-AUG-02		SHEET: 1 OF 1

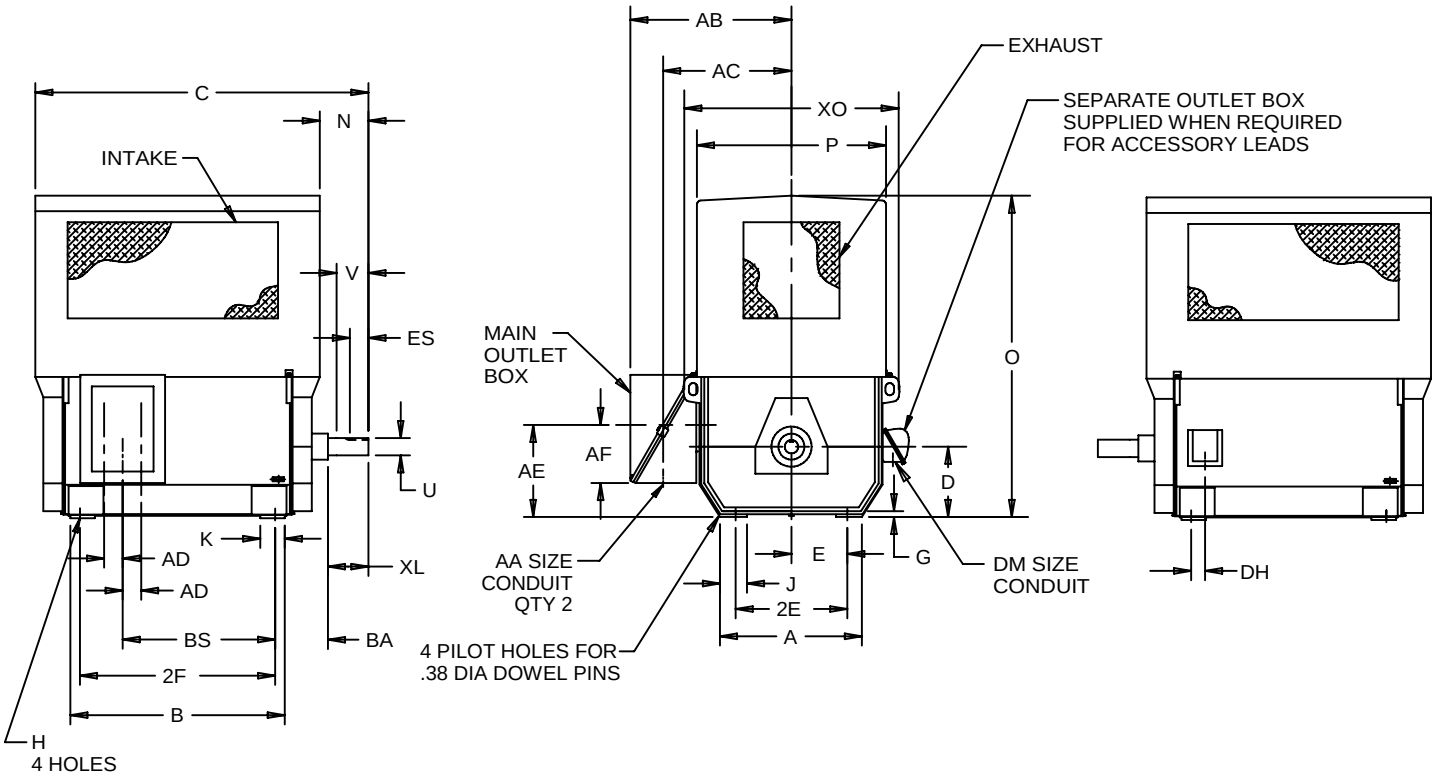

ALL DIMENSIONS ARE IN INCHES

A	D -.06	E	2E	G	H	J	K	O	P	BA	XO
28.50	12.50	10.00	20.00	1.13	.94	6.25	7.75	59.13	30.63	8.50	38.50

FRAME	B	C	2F	BS	DH
5006S	26.63	43.88	20.00	12.81	1.19
5006MS	26.63	44.88	20.00	12.81	1.19
5008S	31.63	48.88	25.00	17.81	1.19
5008MS	31.63	49.88	25.00	17.81	1.19
5008SS	31.63	47.88	25.00	17.81	1.19
5010S	38.63	55.88	32.00	24.81	6.19
5010MS	38.63	56.88	32.00	24.81	6.19
5010SS	38.63	54.88	32.00	24.81	6.19
5012S	46.63	63.88	40.00	32.81	6.19
5012MS	46.63	64.88	40.00	32.81	6.19
5012SS	46.63	62.88	40.00	32.81	6.19

FRAME	N	U -.001	V MIN	ES MIN	SQ KEY	XL
5000S	4.63	2.875	5.50	4.00	.750	5.75
5000MS	5.63	3.375	6.50	5.00	.875	6.75
5000SS	3.63	2.375	4.50	3.00	.625	4.75

FRAME	AA	AB	AC	AD	AE	AF	DM
5000	3 1/2 NPT	32.06	23.19	3.00	13.94	10.94	3/4 NPT

1: ALL ROUGH DIMENSIONS MAY VARY BY .25" DUE TO CASTING AND/OR FABRICATION VARIATIONS.
2: CONDUIT BOX MAY BE LOCATED ON EITHER SIDE. STANDARD AS SHOWN WITH CONDUIT DOWN.
3: "BA" DIMENSION TOLERANCE ±.25.

COUPLING SELECTION:
SLEEVE BEARING MOTORS ARE NOT DESIGNED TO WITHSTAND AXIAL THRUST LOADS. THE MOTOR AND DRIVEN EQUIPMENT SHOULD BE ASSEMBLED AND ADJUSTED SO THAT THE SCRIBE LINE ON THE MOTOR SHAFT IS IN LINE WITH THE OUTER SEAL FACE DURING OPERATING CONDITIONS. THE MOTOR ROTOR MUST BE LIMITED FROM TRAVELING TO EITHER EXTREME END LIMITS. LIMITED END FLOAT TYPE COUPLINGS ARE REQUIRED. MINIMUM MOTOR ROTOR FLOAT LIMIT IS 0.50 INCHES, AND TOTAL MAXIMUM COUPLING END FLOAT LIMIT IS 0.19 INCHES.

IHP_DP_NMCA (MAR-2011) SOLIDEDGE

07-1903/D

Nidec Motor Corporation
St. Louis, Missouri

INFORMATION DISCLOSED ON THIS DOCUMENT IS CONSIDERED PROPRIETARY AND SHALL NOT BE REPRODUCED OR DISCLOSED WITHOUT WRITTEN CONSENT OF NIDEC MOTOR CORPORATION

ISSUED BY R. KING
APPROVED BY T. COLOMA