EFFECTIVE: 04-SEP-20	DIMENSION PRINT WEATHER PROTECTED TYPE I FRAME: 360VP, VPA BASIC TYPE: RV4	PRINT: 09-3422
SUPERSEDES: 06-NOV-19		SHEET: 1 OF 1

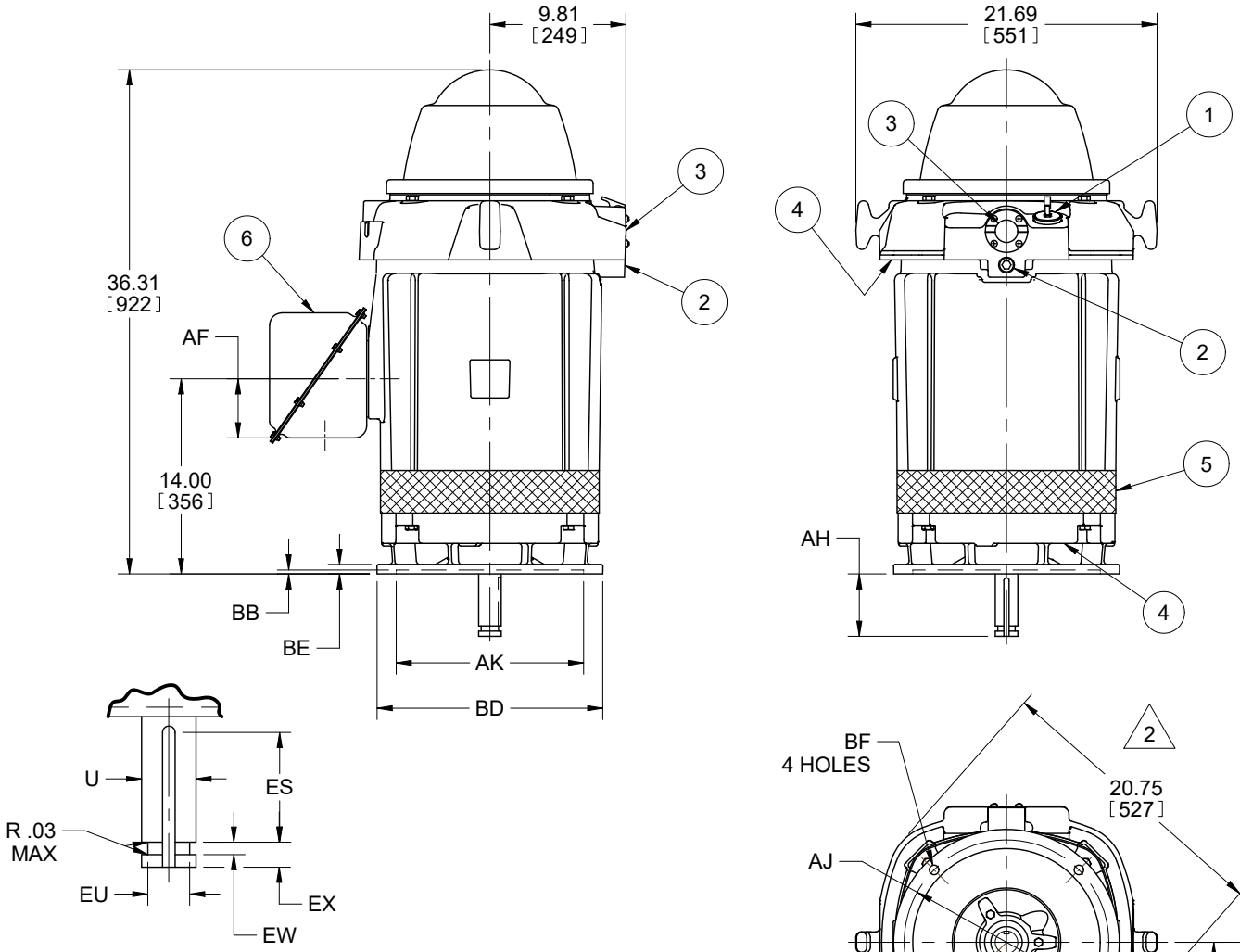

ALL DIMENSIONS ARE IN INCHES AND MILLIMETERS
(TOLERANCES ARE IN INCHES)

	UNITS	C/BOX VOLUME (CU. IN.)	AA	AB	AC	AF
	IN	470	3.00	15.88	11.88	4.25
	MM			403	302	108

	UNITS	U -.001	AH	ES MIN	EU -.005	EW +.002	EX -.005	SQ KEY
	IN	1.625	4.50	3.16	1.250	.375	.750	.375
	MM	41.28	114	80	31.75	9.53	19.05	9.53

	FRAME	UNITS	AJ	AK +.005	BB MIN	BD MAX	BE	BF
	364, 365VP	IN	14.750	13.500	.25	16.50	.69	.688
		MM	374.65	342.9	6	419	18	17.48
	364, 365VPA	IN	9.125	8.250	.19	12.00	.69	.438
		MM	231.78	209.55	5	305	18	11.13

1. CONDUIT OPENING MAY BE LOACTED IN STEPS OF 90 DEGREES. STANDARD AS SHOWN WITH CONDUIT OPENING DOWN.

2 LARGEST MOTOR WIDTH.

TOLERANCES	8.250 AK	13.500 AK
FACE RUNOUT	.004 TIR	.007 TIR
PERMISSIBLE ECCENTRICITY OF MOUNTING RABBET	.004 TIR	.007 TIR
PERMISSIBLE SHAFT RUNOUT	.002 TIR	.002 TIR
TOLERANCE ON AK DIMENSION	+.003	+.005
NON-MACHINED DIMENSIONS MAY VARY BY ±.25		

FEATURE LISTING

1	UPPER SUMP OIL FILL	6	MAIN CONDUIT BOX		
2	UPPER SUMP OIL DRAIN				
3	UPPER SUMP SIGHT WINDOW				
4	AIR INTAKE				
5	AIR EXHAUST, 360° AROUND				

09-3422/A

Nidec Motor Corporation
St. Louis, Missouri

INFORMATION DISCLOSED ON THIS DOCUMENT IS CONSIDERED PROPRIETARY AND SHALL NOT BE REPRODUCED OR DISCLOSED WITHOUT WRITTEN CONSENT OF NIDEC MOTOR CORPORATION

ISSUED BY I. GONZALEZ
APPROVED BY M. RAMIREZ

IHP_DP_NMCA (MAR-2011) SOLIDEDGE