V02 USEM pg 1 English

VAR	MODEL	CUSTOMER	CAT. NO.	A	B	C	D	HP	VOLTS	SF	AMPS	HZ	RPM	CONN VOLTS	PROT.	DESCRIPTION / REMARKS
001	T63BXCNH-2146	USEM	D1CPM1PH	12.86	-----	-----	-----	1.0	115/230	1.25	9.3/4.3	60	3450	230	MANUAL	N56H, ODP, RESET LABEL
002	T063BXCNK-2149	USEM	D32CPM1PH	12.89	-----	-----	-----	1.50	115/230	1.15	13.3/6.7	60	3450	230	MANUAL	N56H, ODP, RESET LABEL
003	T063CPL-2173	USEM	D1CP1PH	12.89	-----	-----	-----	1.0	115/230	1.25	9.3/4.3	60	3450	230	NONE	N56H, ODP
004	T063CRC-2188	USEM	D32CP1PH	12.86	-----	-----	-----	1.50	115/230	1.15	13.3/6.7	60	3450	230	NONE	N56H, ODP

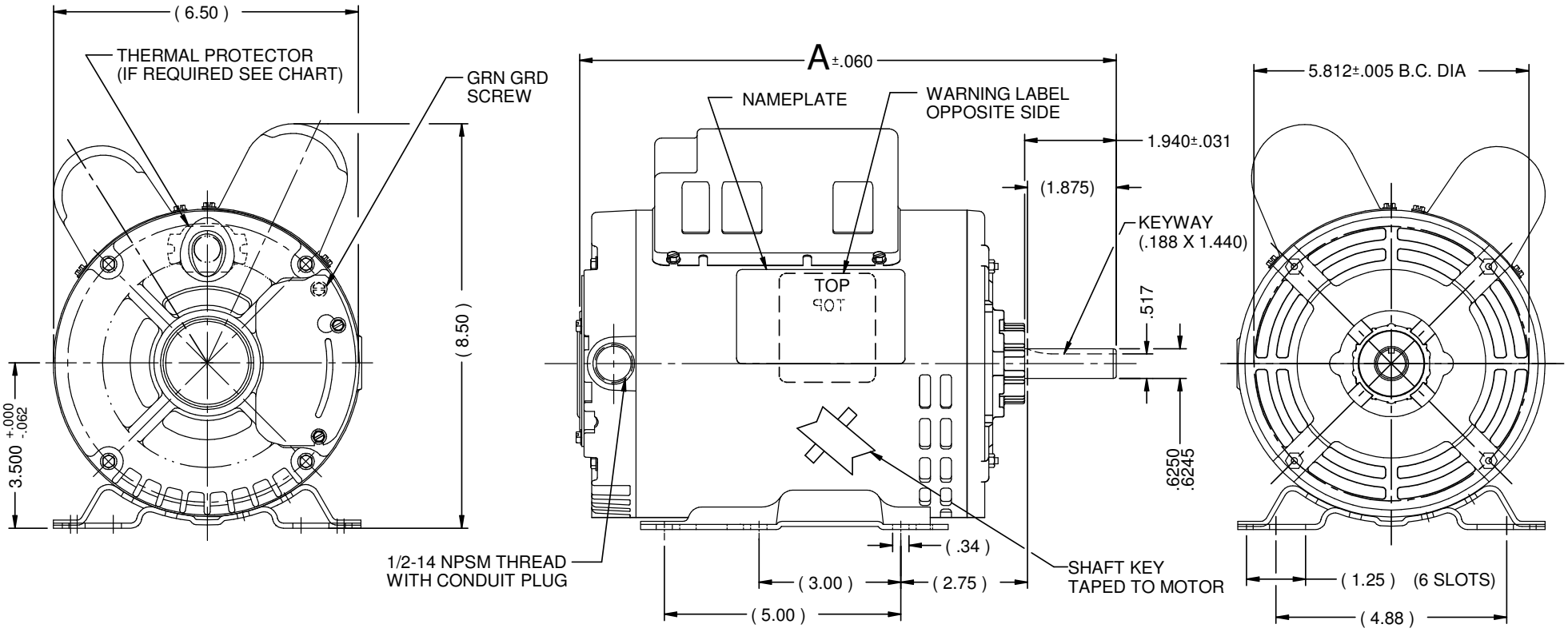

NIDEC MOTOR CORPORATION 06-Jan-17

REFER TO S.E.I.M. 24-1

REVISION RECORD FOR: ECO E27683

MODEL NAME HAS BEEN UPDATED AND "A" DIMENSION WAS CHANGED FROM 11.39" TO 12.86" ONLY PER VARIATION 001. ON PAGES 1 & 2.

ISSUED BY : G. MEDINA

ENGINEER APPROVED : T. BOSSALLER

TOLERANCES ON DIMENSIONS (UNLESS OTHERWISE SPECIFIED)

INCHES	mm
.XX = ± .010 .XXX = ±.005	

ANGLES X°= ±1°

NIDEC MOTOR CORPORATION

INFORMATION DISCLOSED ON THIS DOCUMENT IS CONSIDERED PROPRIETARY AND SHALL NOT BE REPRODUCED OR DISCLOSEDWITHOUT WRITTEN CONSENT OF NIDEC MOTOR CORPORATION

REVISION DATE : 06-JAN-17

TITLE	CODE	ITEM NO.	REV	SHEET NUMBER	DWG SIZE
CUSTOMER DETAIL DRAWING	V02	803151	E	1 OF 4	B