V02 USEM pg 1 English

VAR	MODEL	CUSTOMER	CAT. NO.	A	B	C	D	HP	VOLTS	SF	AMPS	HZ	RPM	CONN VOLTS	PROT.	DESCRIPTION / REMARKS
001	T63YZCNY-2161	USEM	D2CPM2PH	13.08	-----	-----	-----	2.0	115/230	1.15	17/8.5	60	1725	230	MANUAL	N56H, ODP
002	T63VZCPE-2167	USEM	D2CPA2PH	13.08	-----	-----	-----	2.0	115/230	1.15	17/8.5	60	1725	230	AUTO	N56H, ODP,

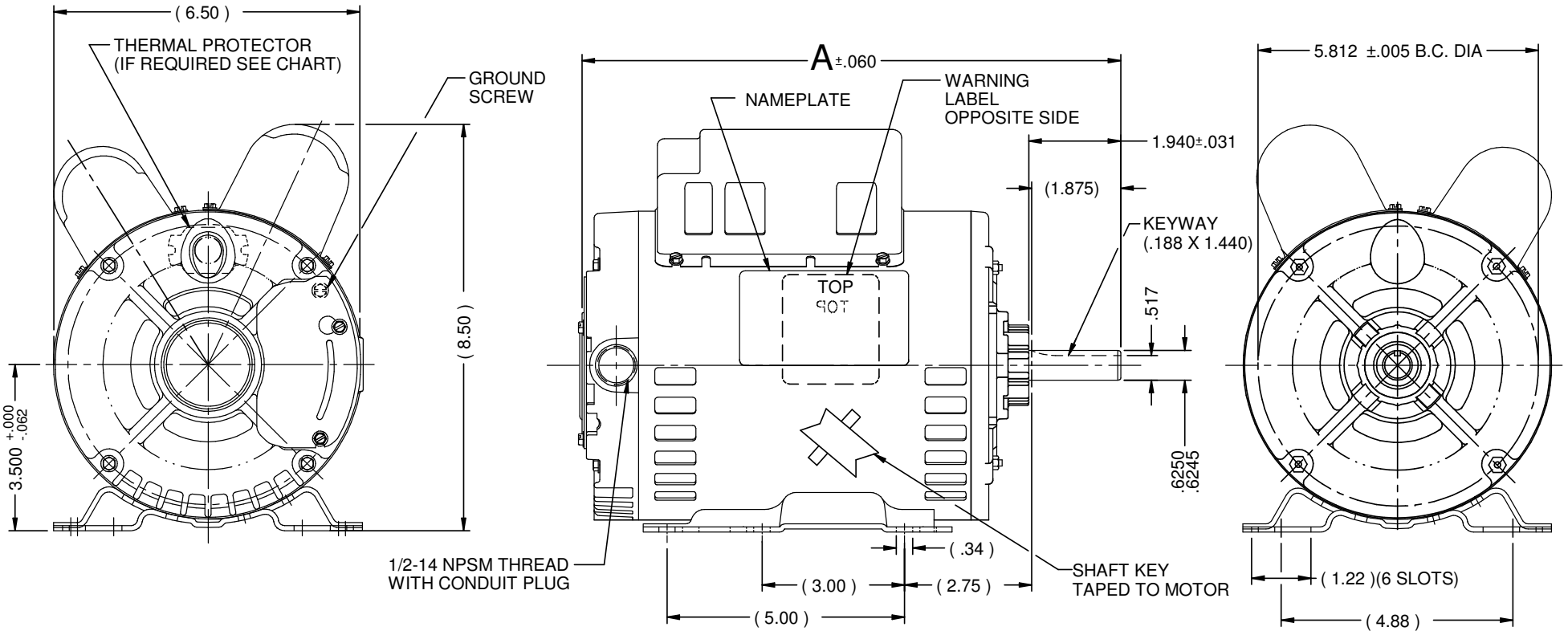

NIDEC MOTOR CORPORATION 27-Mar-17

MOTOR IS CCW ROTATION LEAD END, TO REVERSE ROTATION INTERCHANGE RED AND BLACK LEADS.

REFER TO S.E.I.M. 24-1

REVISION RECORD FOR: ECO E28342

CHANGED ON REQ. CRITICAL #3 GASKET FROM G103294170001 TO G103294170000

ISSUED BY : C.ALMAGUER

ENGINEER APPROVED : T. BOSSALLER

TOLERANCES ON DIMENSIONS (UNLESS OTHERWISE SPECIFIED)

INCHES	mm
.XX = ± .010 .XXX = ±.005	

ANGLES X°= ±1°

NIDEC MOTOR CORPORATION

INFORMATION DISCLOSED ON THIS DOCUMENT IS CONSIDERED PROPRIETARY AND SHALL NOT BE REPRODUCED OR DISCLOSEDWITHOUT WRITTEN CONSENT OF NIDEC MOTOR CORPORATION

REVISION DATE : 27-MAR-17

TITLE	CODE	ITEM NO.	REV	SHEET NUMBER	DWG SIZE
CUSTOMER DETAIL DRAWING	V02	803819	D	1 OF 4	B

V02_NMCB (MAR-2014)

SOLIDEDGE