V02 USEM pg 1 English

VAR	MODEL	CUSTOMER	CAT. NO.	A	B	C	D	HP	VOLTS	SF	AMPS	HZ	RPM	CONN VOLTS	PROT.	DESCRIPTION / REMARKS
001	T63CPJ-2171	USEM	D32CP2PH9	12.785	-------	-------	-------	1.5	115/230	1.15	13.4/6.7	60	1725	----	NONE	N56H, ODP
002	T63CXCLW-2150	USEM	D32CPA2PH9	13.285	-------	-------	-------	1.5	115/230	1.15	13.4/6.7	60	1725	----	AUTO	N56H, ODP

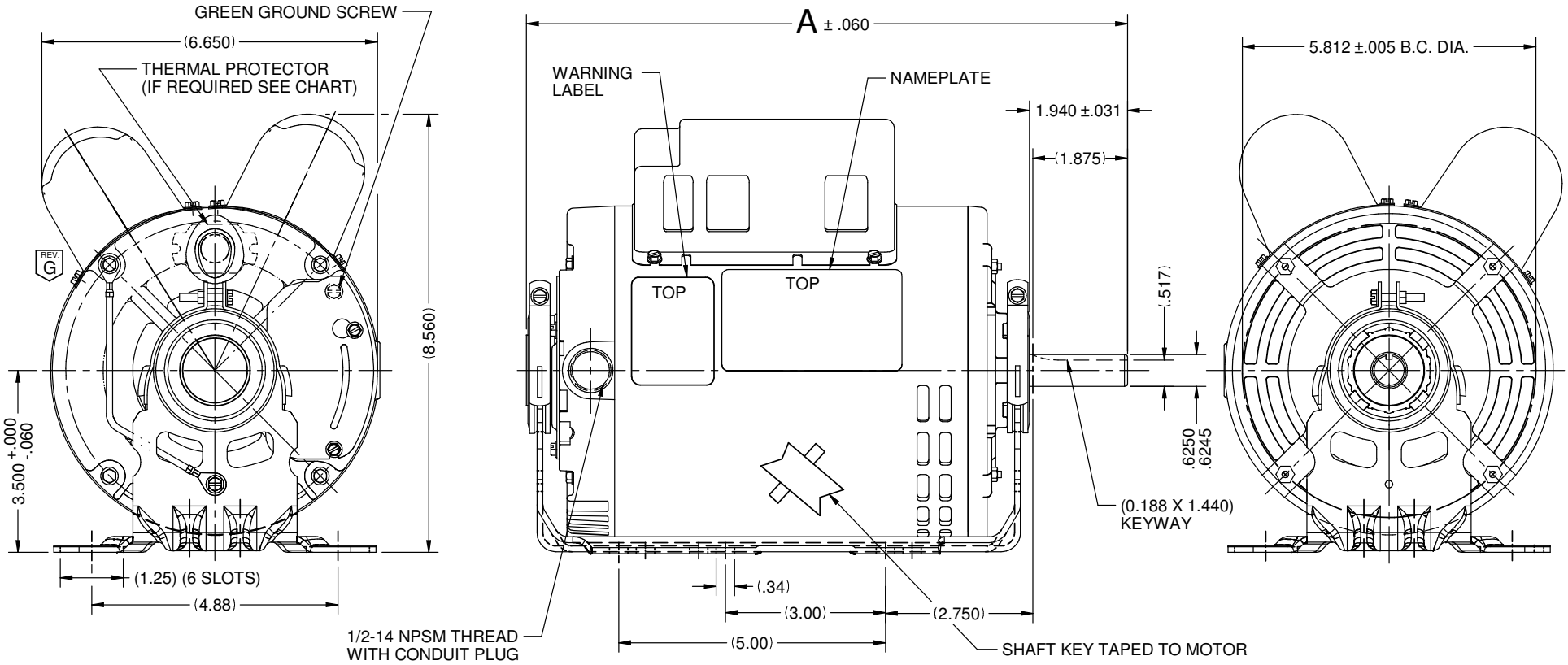

NIDEC MOTOR CORPORATION 11-Apr-18

MOTOR IS CCW ROTATION LEAD END, TO REVERSE ROTATION INTERCHANGE RED AND BLACK LEADS

REFER TO S.E.I.M. 24-1

REVISION RECORD FOR: ECO E30650

CHANGED VIEW OF GROUND LEAD TO BEHIND OF THE BASE.

ISSUED BY : C. LUGO

ENGINEER APPROVED : F. FLORES

TOLERANCES ON DIMENSIONS (UNLESS OTHERWISE SPECIFIED)

INCHES	mm
.XX = ± .010 .XXX = ±.005	

ANGLES X°= ±1°

NIDEC MOTOR CORPORATION

INFORMATION DISCLOSED ON THIS DOCUMENT IS CONSIDERED PROPRIETARY AND SHALL NOT BE REPRODUCED OR DISCLOSEDWITHOUT WRITTEN CONSENT OF NIDEC MOTOR CORPORATION

REVISION DATE : 13-APR-18

TITLE	CODE	ITEM NO.	REV	SHEET NUMBER	DWG SIZE
CUSTOMER DETAIL DRAWING	V02	803960	G	1 OF 4	B

V02_NMCB (MAR-2014)

SOLIDEDGE