VAR	MODEL	CUSTOMER	CATALOG NO.	A	B	HP	VOLTS	SF	AMPS	HZ	RPM	CONN VOLTS	PROT.	DESCRIPTION / REMARKS
001	M055PWFMM-1644	WHOLESALE HAC	EC8330	12.832	10.770	3/4 - 1	208-230	1.0	6.8-6.4 & 6.9-6.5	60 & 50	1800/VAR SPD	208-230	ELECTRONIC	CCW SHAFT END REV
002	M055PWMBP-2640	WHOLESALE HAC	EC8320	12.832	10.770	3/4	115	1.0	8.2-9.1	60 & 50	1800/VAR SPD	120	ELECTRONIC	CCW SHAFT END REV
003	M055PWFNH-1662	WHOLESALE HAC	EC8310	12.832	10.770	1/4 - 1/2	208-230	1.0	3.4-3.2 & 3.5-3.3	60 & 50	1800/VAR SPD	208-230	ELECTRONIC	CCW SHAFT END REV
004	M055PWFPG-1683	WHOLESALE HAC	EC8300	12.832	10.770	1/4 - 1/2	115	1.0	6.1-6.5	60 & 50	1800/VAR SPD	120	ELECTRONIC	CCW SHAFT END REV

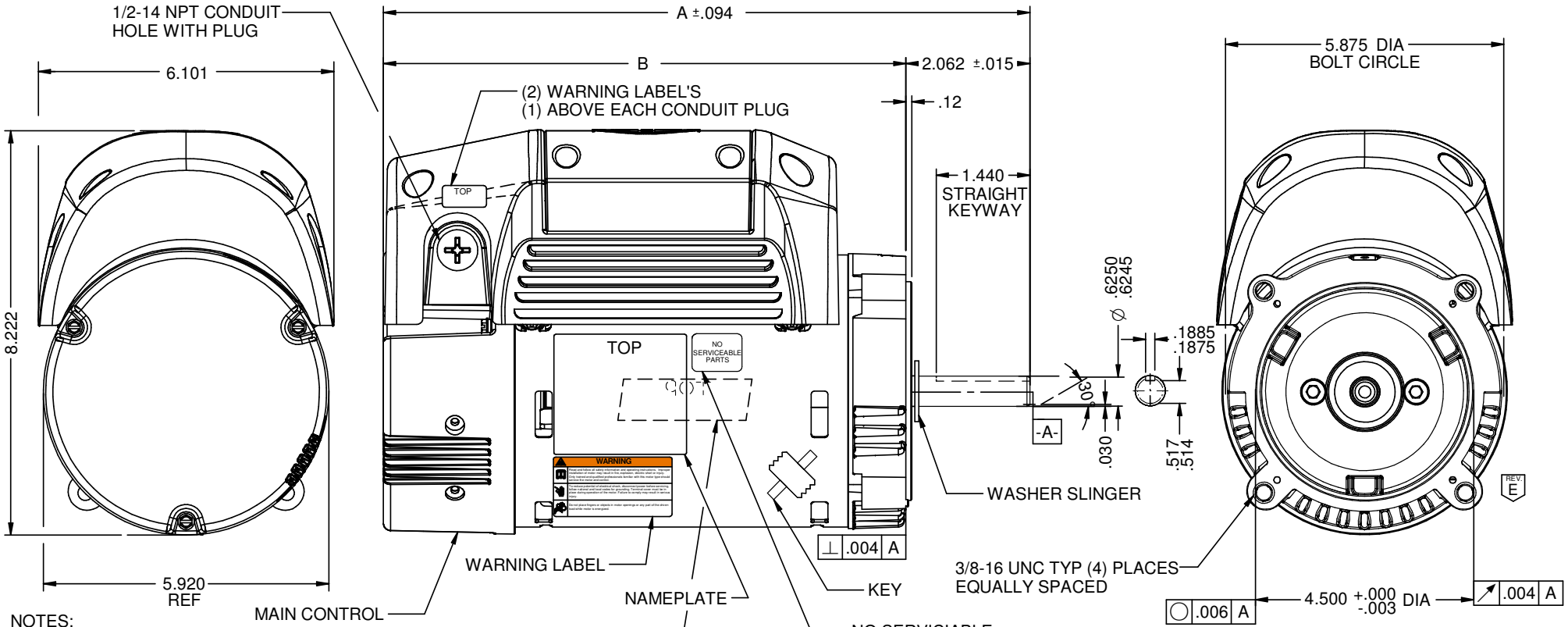

NOTES:

1) BEARINGS MUST BE LUBRICATED WITH POLYREX EM
2) MOTOR TO OPERATE CCW ROTATION SHAFT END TO REVERSE ROTATION INTERCHANGE RED AND YELLOW LEADS

NIDEC MOTOR CORPORATION 15-Dec-18

REFER TO S.E.I.M. 24-1

REVISION RECORD FOR:	ECO E31451
IT WAS REMOVED SLOT IN SCREW OF ENDSHIELD SHAFT END	

ISSUED BY :	ENGINEER APPROVED :
C.ALMAGUER	J.SALINAS

TOLERANCES ON DIMENSIONS (UNLESS OTHERWISE SPECIFIED)

INCHES	mm
.XX = ± .010 .XXX = ±.005	

ANGLES X°= ±1°

NIDEC MOTOR CORPORATION

INFORMATION DISCLOSED ON THIS DOCUMENT IS CONSIDERED PROPRIETARY AND SHALL NOT BE REPRODUCED OR DISCLOSEDWITHOUT WRITTEN CONSENT OF NIDEC MOTOR CORPORATION

REVISION DATE : 17-DEC-18

TITLE	CODE	ITEM NO.	REV	SHEET NUMBER	DWG SIZE
CUSTOMER DETAIL DRAWING	V02	811652	E	1 OF 6	B