MODEL	REF	CUSTOMER	HP	VOLTS	AMPS	HZ	RPM	ROTATION	CAT NO.	DESCRIPTION / REMARKS
KA55HXSMH-2344		STANDARD	1/4	208-230	1.7	60	1075	CCW LEAD END REV	3851	KA55 OPEN HUB OR STUD MTD., SELF-ALIGN, SLV. BRG.

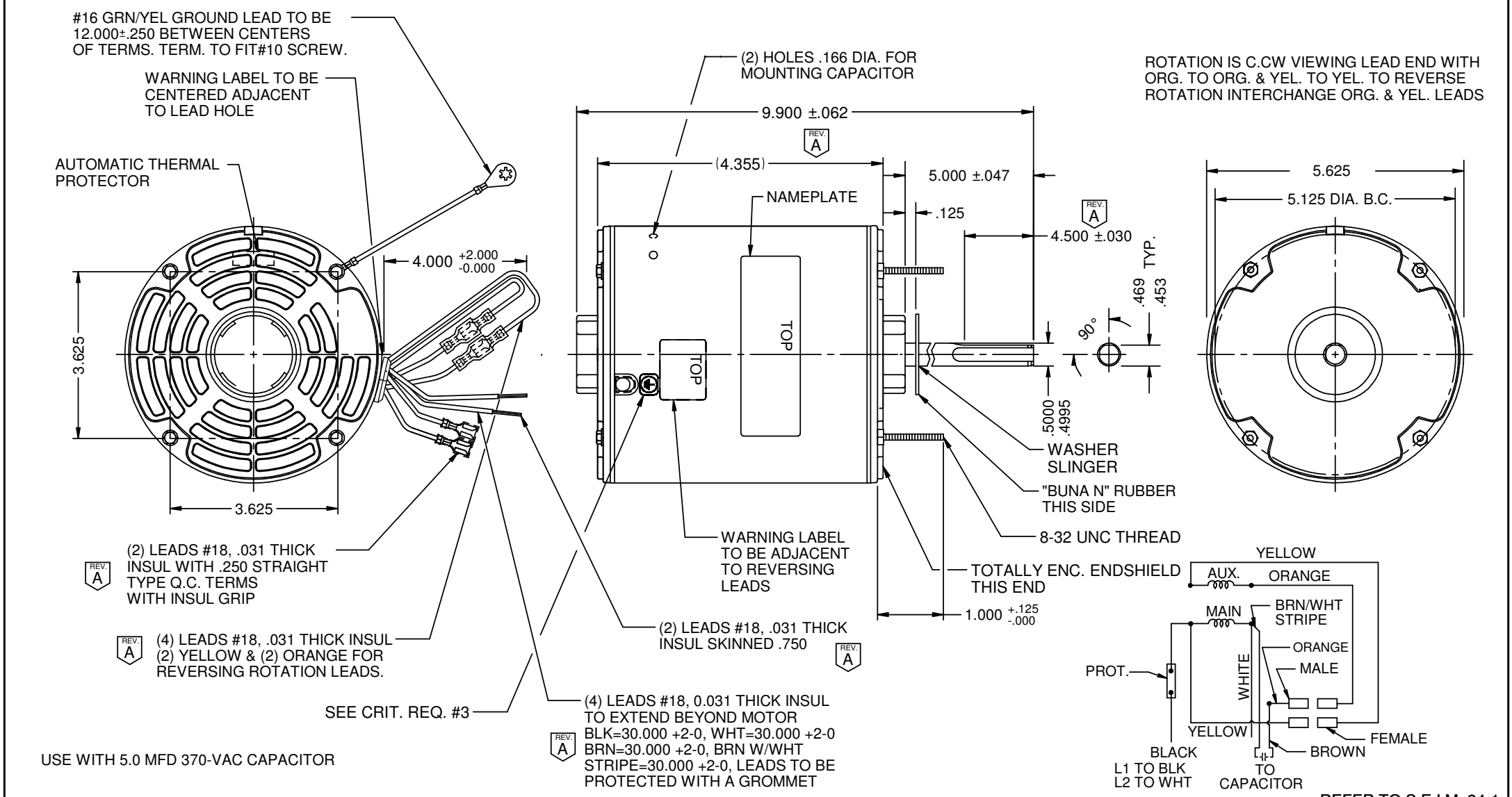

NIDEC MOTOR CORPORATION 29-Jan-19

REVISION RECORD FOR: ECO: E32862
IT WAS ADDED SHELL DIMENSION, TOLERANCE AND CHANGES IN NOTES FROM .062 TO .031

DIMENSIONS ARE FOR REFERENCE ONLY

UNLESS TOLERANCE IS SPECIFIED

NIDEC MOTOR CORPORATION

INFORMATION DISCLOSED ON THIS DOCUMENT IS CONSIDERED PROPRIETARY AND SHALL NOT BE REPRODUCED OR DISCLOSEDWITHOUT WRITTEN CONSENT OF NIDEC MOTOR CORPORATION

REVISION DATE : **29-JAN-19**

ISSUED BY :	ENGINEER APPROVED :	TITLE	CODE	ITEM NO.	REV	SHEET NUMBER	DWG SIZE
F. GARCIA	M. DE LEON	CUSTOMER DETAIL DRAWING	V02	**819888**	**A**	1 OF 3	B