MODEL	REF	CUSTOMER	HP	VOLTS	AMPS	HZ	RPM	ROTATION	CUSTOMER PN.	DESCRIPTION / REMARKS
K55HXWKT-1115	A28510	WHOLESALE-HAC	1/2-1/6	460	1.3	60	1075/2 SPD	CCW LEAD END REV.	5480H	K55 BALL BRG. TOTALLY ENCLOSED

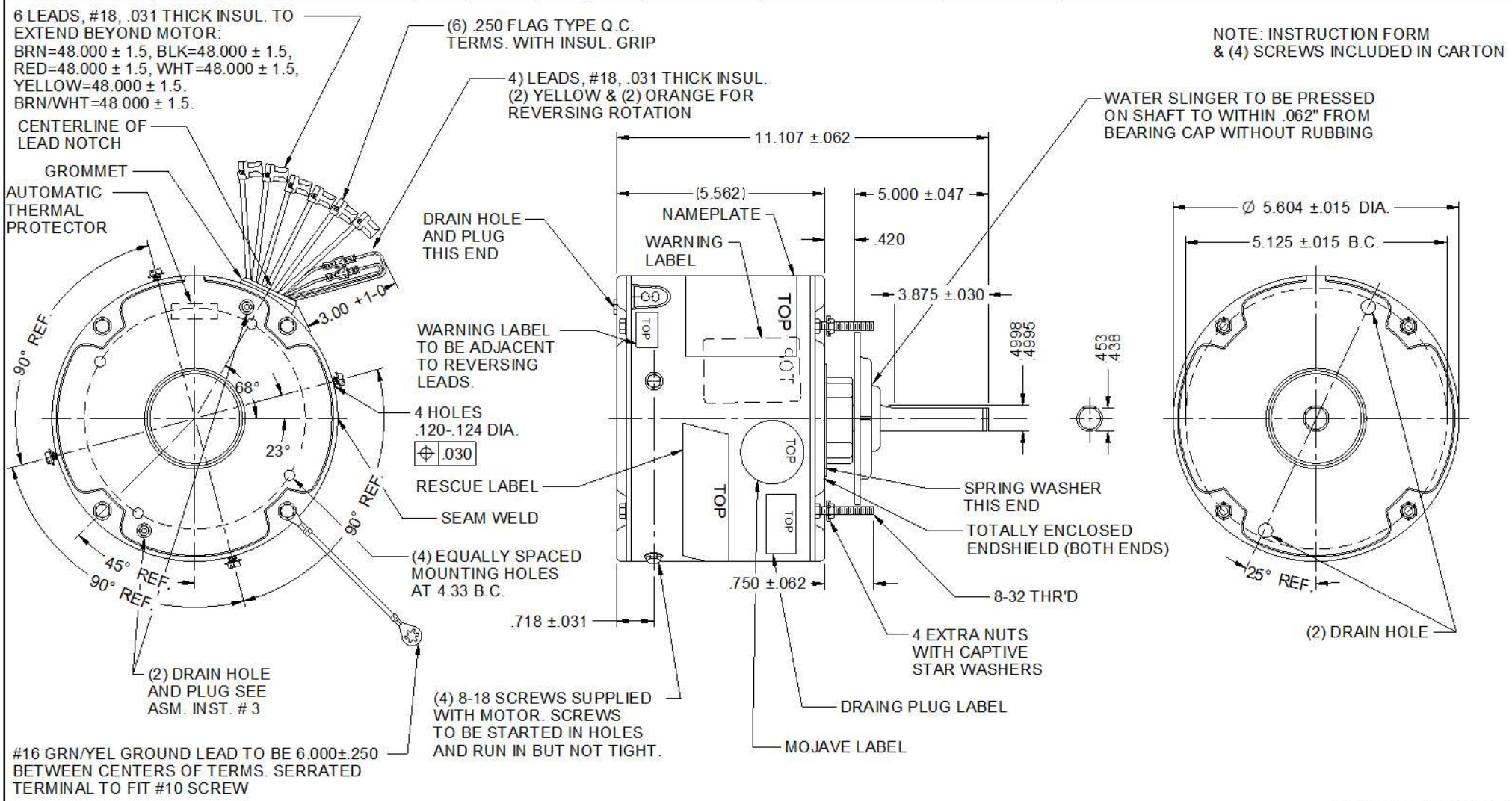

NIDEC MOTOR CORPORATION 20-Oct-21

REFER TO S.E.I.M. 24-1

REVISION RECORD FOR: ECO: E40895

NEW DRAWING CREATED

DIMENSIONS ARE FOR REFERENCE ONLY

UNLESS TOLERANCE IS SPECIFIED

NIDEC MOTOR CORPORATION

INFORMATION DISCLOSED ON THIS DOCUMENT IS CONSIDERED PROPRIETARY AND SHALL NOT BE REPRODUCED OR DISCLOSED WITHOUT WRITTEN CONSENT OF NIDEC MOTOR CORPORATION

REVISION DATE: 20-OCT-21

ISSUED BY:	ENGINEER APPROVED:	TITLE	CODE	ITEM NO.	REV	SHEET NUMBER	DWG SIZE
R. SANCHEZ	C. LUGO	CUSTOMER DETAIL DRAWING	V02	839695	--	1 OF 3	B

V02_NMCB (MAR-2014)

SOLIDEDGE