EFFECTIVE: 21-NOV-18	DIMENSION PRINT IEC WORLD MOTOR HOSTILE DUTY (4 POLE AND SLOWER) FRAME: 280S, M BASIC TYPE: ICTE	PRINT: 08-1147
SUPERSEDES: NEW		SHEET: 1 OF 1

DIMENSIONS ARE SHOWN IN mm

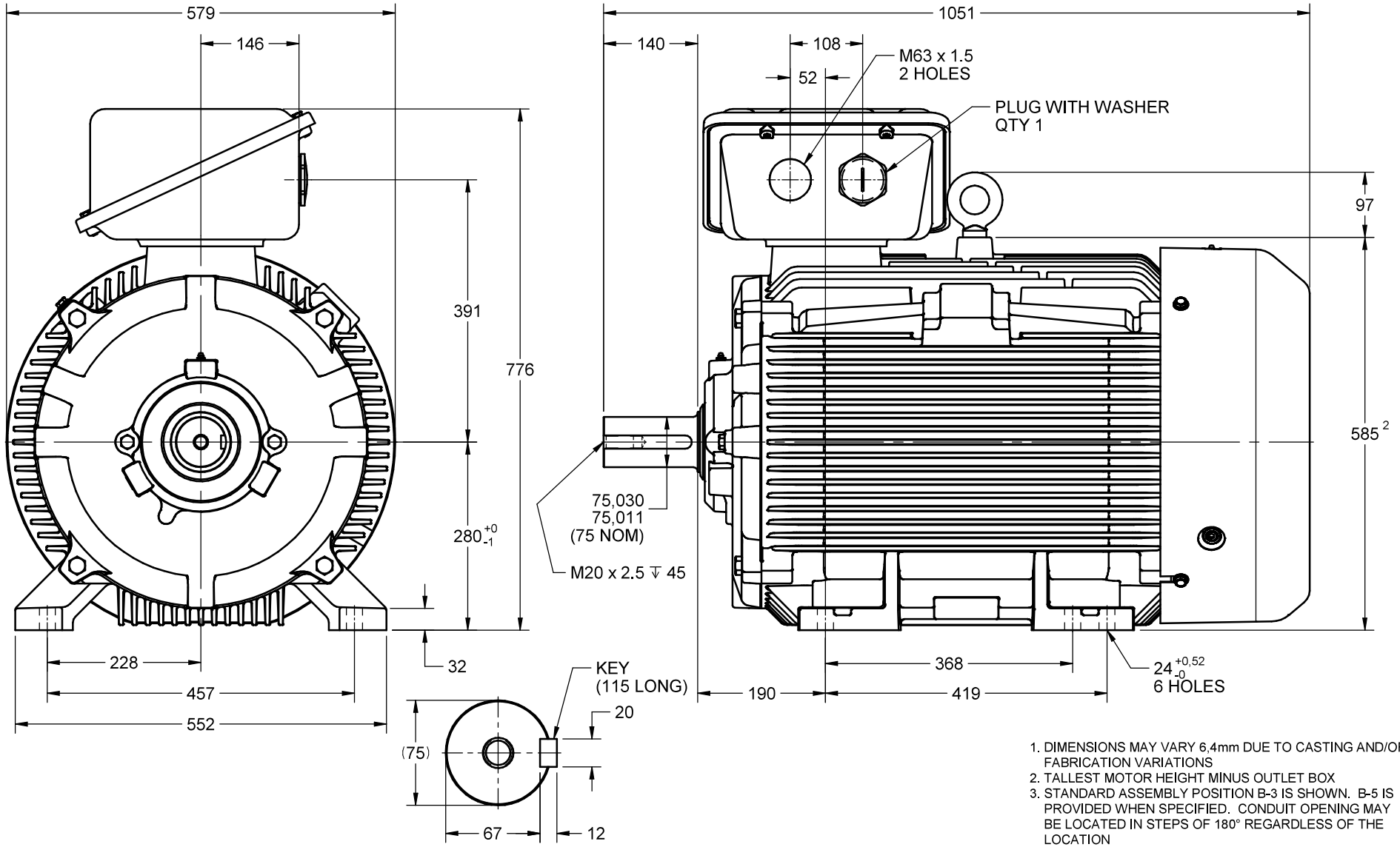

1. DIMENSIONS MAY VARY 6,4mm DUE TO CASTING AND/OR FABRICATION VARIATIONS
2. TALLEST MOTOR HEIGHT MINUS OUTLET BOX
3. STANDARD ASSEMBLY POSITION B-3 IS SHOWN. B-5 IS PROVIDED WHEN SPECIFIED. CONDUIT OPENING MAY BE LOCATED IN STEPS OF 180° REGARDLESS OF THE LOCATION

08-1147/-

Nidec Motor Corporation
St. Louis, Missouri

INFORMATION DISCLOSED ON THIS DOCUMENT IS CONSIDERED PROPRIETARY AND SHALL NOT BE REPRODUCED OR DISCLOSED WITHOUT WRITTEN CONSENT OF NIDEC MOTOR CORPORATION

ISSUED BY
R. TIMMERMANN
APPROVED BY
M. CULLEN

IHP_DP_IEC_NMCA (JAN-2018) SOLIDEDGE